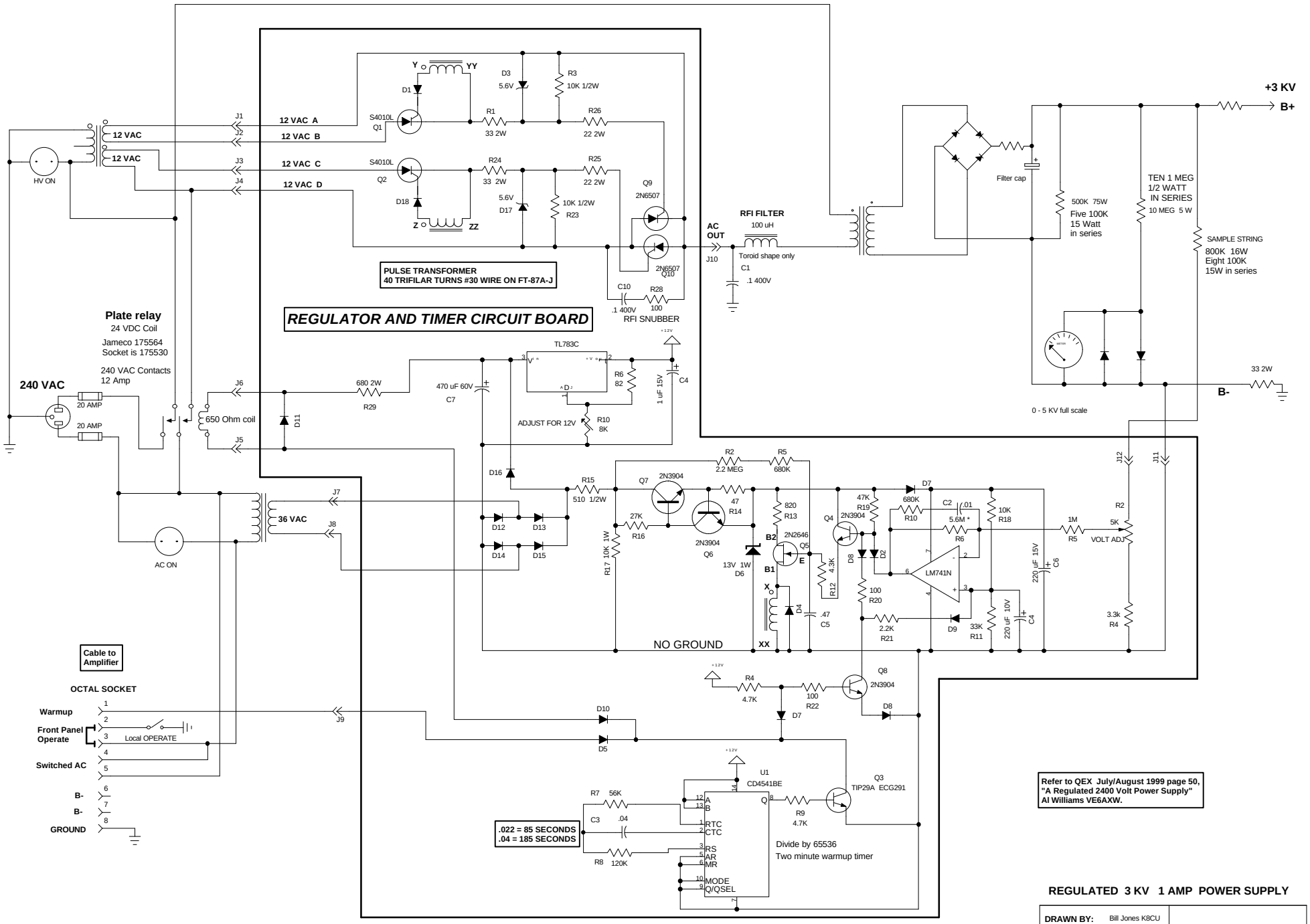
+3 KV
B+
B-
12 VAC
12 VAC
12 VAC
HV ON
J1
J2
J3
J4
12 VAC A
12 VAC B
12 VAC C
12 VAC D
S4010L
Q1
S4010L
Q2
D1
D18
Y
YY
Z
ZZ
D3
5.6V
D17
5.6V
R1
33 2W
R24
33 2W
R3
10K 1/2W
R23
10K 1/2W
R26
22 2W
R25
22 2W
Q9
2N6507
2N6507
Q10
C10
.1 400V
R28
100
RFI SNUBBER
PULSE TRANSFORMER
40 TRIFILAR TURNS #30 WIRE ON FT-87A-J
REGULATOR AND TIMER CIRCUIT BOARD
AC
OUT
J10
RFI FILTER
100 uH
Toroid shape only
C1
.1 400V
Filter cap
500K 75W
Five 100K
15 Watt
in series
TEN 1 MEG
1/2 WATT
IN SERIES
10 MEG 5 W
SAMPLE STRING
800K 16W
Eight 100K
15W in series
33 2W
0 - 5 KV full scale
Plate relay
24 VDC Coil
Jameco 175564
Socket is 175530
240 VAC Contacts
12 Amp
240 VAC
20 AMP
20 AMP
J6
J5
650 Ohm coil
D11
680 2W
R29
470 uF 60V
C7
TL783C
R6
82
1 uF 15V
C4
ADJUST FOR 12V
R10
8K
D16
R15
510 1/2W
R2
2.2 MEG
R5
680K
Q7
2N3904
47
R14
2N3904
Q6
27K
R16
R17 10K 1W
13V 1W
D6
820
R13
B2
2N2646
Q5
E
B1
X
XX
D4
.47
C5
4.3K
R12
Q4
2N3904
47K
R19
D8
D2
100
R20
2.2K
R21
D7
680K
R10
C2
.01
5.6M *
R6
LM741N
D9
33K
R11
10K
R18
220 uF 10V
C4
220 uF 15V
C6
1M
R5
R2
5K
VOLT ADJ
3.3k
R4
J12
J11
NO GROUND
J7
J8
36 VAC
D12
D13
D14
D15
AC ON
Cable to
Amplifier
OCTAL SOCKET
Warmup
Front Panel
Operate
Local OPERATE
Switched AC
B-
B-
GROUND
J9
R4
4.7K
100
R22
Q8
2N3904
D7
D8
D10
D5
U1
CD4541BE
Q3
TIP29A ECG291
R7 56K
C3 .04
R8 120K
.022 = 85 SECONDS
.04 = 185 SECONDS
A
B
RTC
CTC
RS
AR
MR
MODE
Q/QSEL
Q
R9
4.7K
Divide by 65536
Two minute warmup timer
Refer to QEX July/August 1999 page 50,
"A Regulated 2400 Volt Power Supply"
Al Williams VE6AXW.
REGULATED 3 KV 1 AMP POWER SUPPLY
DRAWN BY: Bill Jones K8CU
PAGE 1 of 1
DATE: 5-10-2002
SOME EXTERNAL COMPONENTS ARE ILLUSTRATED FOR CLARITY.
COPYRIGHT 2001 K8CU
ALL RIGHTS RESERVED