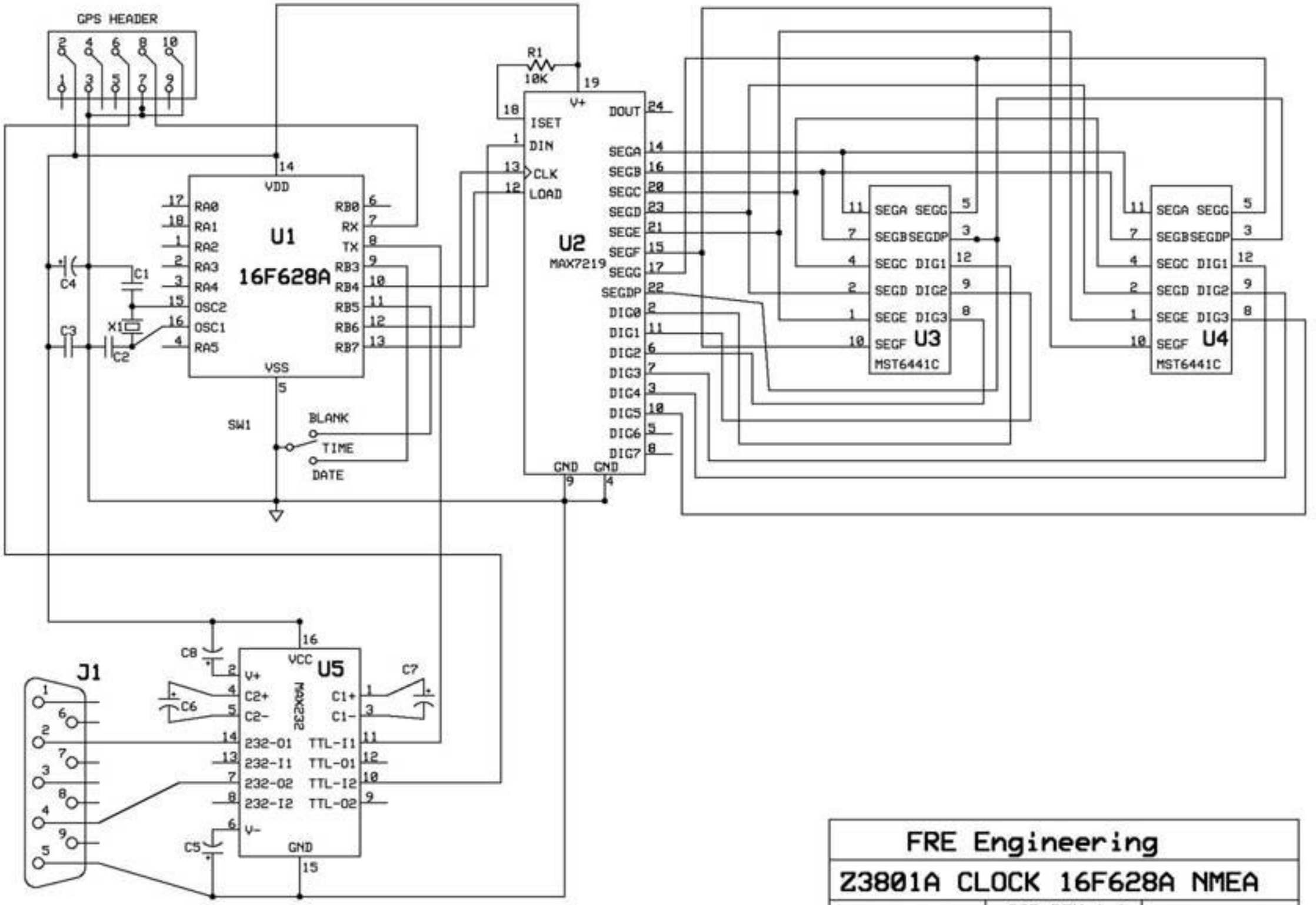

FRE Engineering		
Z3801A CLOCK 16F628A NMEA		
G4FRE	PCB REV 1.2 5/9/2004	Page 1